(HTI)

Electrical Engineering & Computers Department

Project report

(Digital Clock with Date)

Microcontroller

(EEC 214)

Submitted by:

ابراهيم جمال عبدالموجود علي – 20211073
مصطفي احمد محمد عبدالسلام – 20210746
طه احمد محمد سيد – 20210753
اسلام خالد حسن – 20200845
عبدالرحمن معتمد محمد خيري – 20200489
عبدالرحمن اسامة محمد ابومهدي – 20200481

Submitted to:

Dr: Mohamed Torad

Nov 2024

[Abstract]

This project focuses on the development of a versatile digital clock using the ATmega32 microcontroller, an alarm function, and a user-friendly interface for time and date adjustments. The primary objectives include designing a reliable timekeeping system, implementing an intuitive user interface, and incorporating an alarm feature to enhance the clock's functionality.

The clock utilizes the ATmega32 microcontroller's internal timer for precise timekeeping. The real-time clock functionality ensures accurate time tracking, while an added alarm feature enhances user experience by allowing them to set personalized wake-up times or reminders. The user interface is designed for ease of interaction, employing push buttons to enable users to effortlessly adjust both time and date settings.

The implementation encompasses clock initialization, timekeeping logic, and display algorithms, detailing how the microcontroller manages and updates time data. The user interface facilitates seamless interaction through keypad, employing debouncing mechanisms to ensure reliable input. Additionally, the display logic is carefully designed to convert time and date information into a format suitable for the LCD.

Testing procedures have been rigorously applied to validate the accuracy and reliability of the digital clock, including functional tests for timekeeping, date adjustments, and alarm triggering. Challenges encountered during the development process have been addressed to ensure a robust and user-friendly final product.

In conclusion, this project successfully integrates a digital clock with advanced features, providing users with not only a reliable timekeeping device but also an alarm function and an intuitive interface for personalized time and date adjustments. Future enhancements could explore additional features such as different alarm tones, or connectivity options. The versatility of this digital clock makes it a valuable and adaptable solution for various applications, from personal use to professional settings.

Acknowledgment

At first, Thanks to **ALLAH** the most merciful the most gracious, for this moment has come and this work has been accomplished. Thanks to the **Higher Technological Institute of 10th Ramdan** for preparing me to be a successful Engineer and lifting me up to achieve this training in an environment that is full of encouragement and motivation.

Deepest gratitude is to be delivered to **Dr.Mohammed Torad**, my role model in engineering. He understood the nature of my thoughts and guided me step by step till this work was brought to light. Endless trust in my potential guided me till the end. Thank you.

Not to forget everyone who helped me, prayed for me, wished me luck, or pushed me forwards and bored me a lot to help this work come to life. Thanks to my colleagues, friends, laborers, technicians, and everyone else for everything they did.

Last but never forgotten, Thanks to my dear family, for being supportive and always by my side. No words can express my deepest and sincere gratitude towards the love and care you have granted me in my hardest times. May **ALLAH** fill your hearts with happiness when we share this success together.

Table of Contents

Acknowledgment 2
Table of figures 4
Chapter 1 5
Introduction 5
chapter 2 6
components 6
AVR_USPASP 6
ATmega32 Microcontroller 6
LCD Display 7
LCD header pin 7
Crystal Oscillator (32768 HZ) 7
Resistors and Capacitors 7
Chapter 3 8
Circuit simulation 8
Chapter 4 10
Implementation 10
Clock Initialization and Timekeeping 10
Display Logic 10
Hardware 11
Chapter 5 12
Code 12
Chapter 6 18
Conclusion & Future Enhancements 18
conclusion 18
Future Enhancements 18
References 19

Table of figures

Figure 1 AVR_USPASP 6
Figure 2 ATmega32 Microcontroller 6
Figure 3 LCD Display 7
Figure 4 LCD header pin 7
Figure 5 Push Button 7
Figure 6 Crystal Oscillator (32768 HZ) 7
Figure 7 Resistors and Capacitor 7
Figure 8 circuit simulation 8
Figure 9 The Pin Configurations of the controller 9
Figure 10 Hardware 11

Chapter 1

Introduction

The aim of this project is to design and implement a feature-rich digital clock utilizing the ATmega32 microcontroller. The clock incorporates an alarm function for enhanced utility, an LCD display for clear information presentation, and a keypad interface to facilitate user input.

This report describes that project in 7 chapters:

1. Introduction
2. Components Used
3. Circuit simulation
4. Implementation
5. Code
6. Conclusion & Future Enhancements
7. references

chapter 2

components

- AVR_USPASP
- ATmega32 Microcontroller
- LCD Display (16x2)
- LCD header pin
- Push Button
- Crystal Oscillator (32768 HZ)
- Resistors and Capacitors
- Power Supply
- Male to female jumpers

AVR_USPASP

Figure 1 AVR_USPASP

ATmega32 Microcontroller

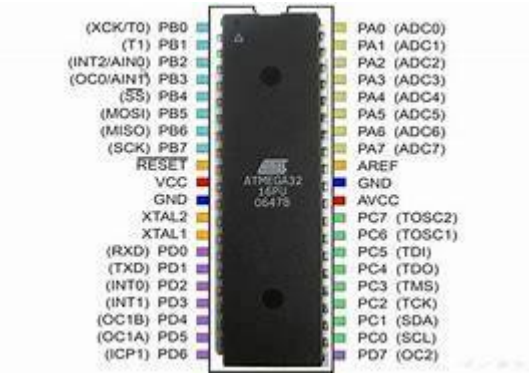

Figure 2 ATmega32 Microcontroller

LCD Display

Figure 3 LCD Display

LCD header pin

Figure 4 LCD header pin

Push Button

Figure 5 Push Button

Crystal Oscillator (32768 HZ)

Figure 6 Crystal Oscillator (32768 HZ)

Resistors and Capacitors

Figure 7 Resistors and Capacitor

Chapter 3

Circuit simulation

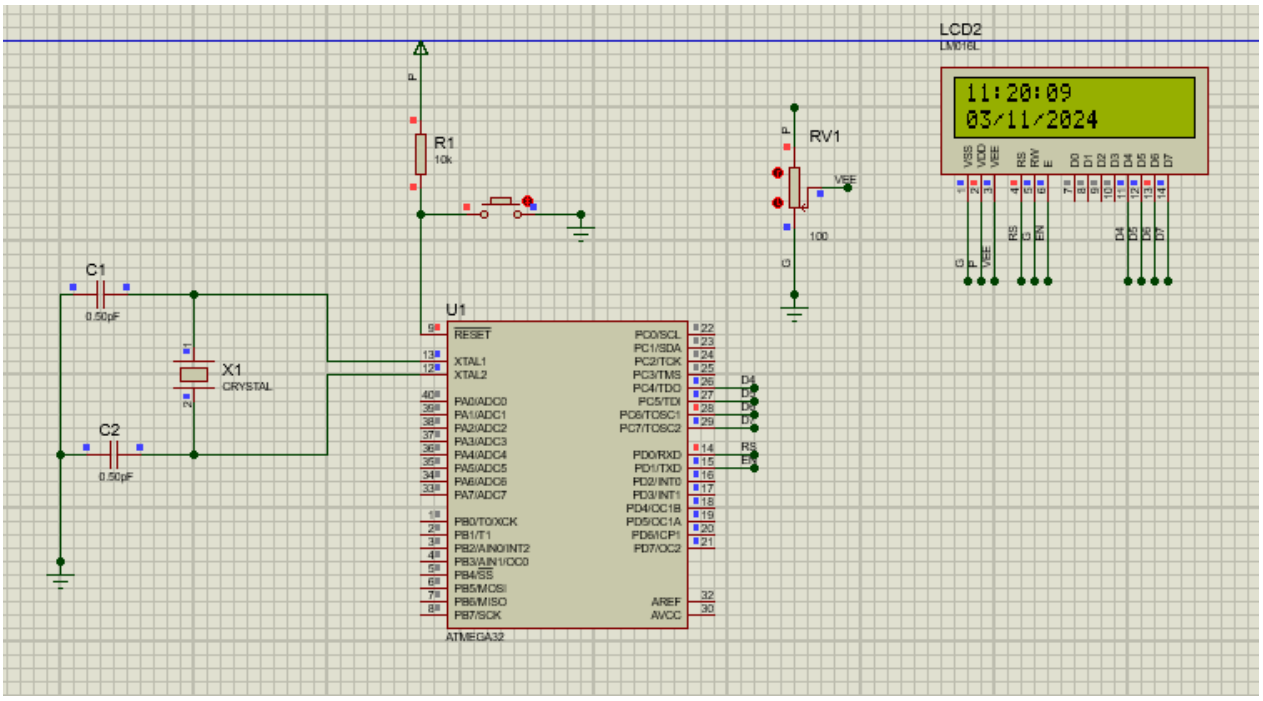

Figure 8 circuit simulation

- This simulation is done on a proteus program.
- It includes all the components of the circuit to be done as well as hardware.
  - On the top right is the LCD 2*16 which is data output for the user
  - On the bottom left is the push button which receive the input data from user
  - On the top left the Crystal Oscillator (32768 HZ)
  - Beside the crystal to the left is the alarm
  - Going more left of it we found the ATmega32.
  - On the bottom left we found a block of strings to guide the user

- We used the Atmel studio to create the files that needed to be burned on that controller from our code.

❖ The Pin Configurations of the controller

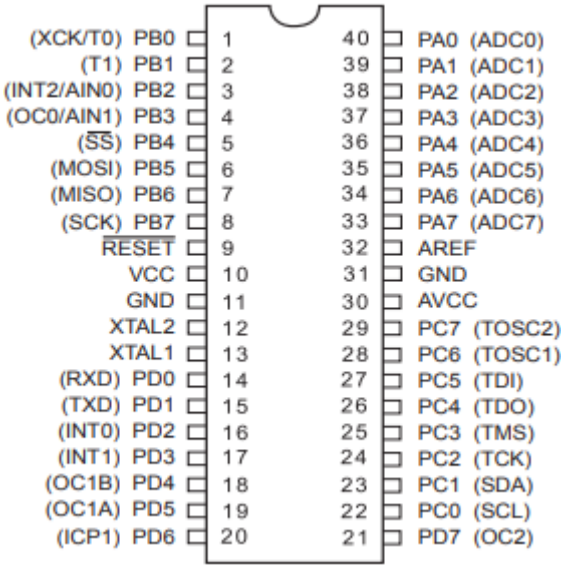

Figure 9 The Pin Configurations of the controller

Chapter 4

Implementation

Clock Initialization and Timekeeping

The clock initializes by configuring the microcontroller. The internal timer of the ATmega32 is utilized for precise timekeeping. the microcontroller regularly updates its internal clock.

Display Logic

The LCD display presents time, date and. A dedicated algorithm converts the timekeeping data into a format suitable for the 16x2 display. The clarity of the LCD ensures easy readability.

User Interface with Push Button

The Push Button interface allows users to interact with the clock effortlessly. Users can set and adjust the time, date, and alarm parameters using the Push Button. Debouncing mechanisms are implemented for reliable input.

Hardware

- A real picture for the project after implementation:-
  - The date is set 13/12/2023.
  - Time set as 11:29:10

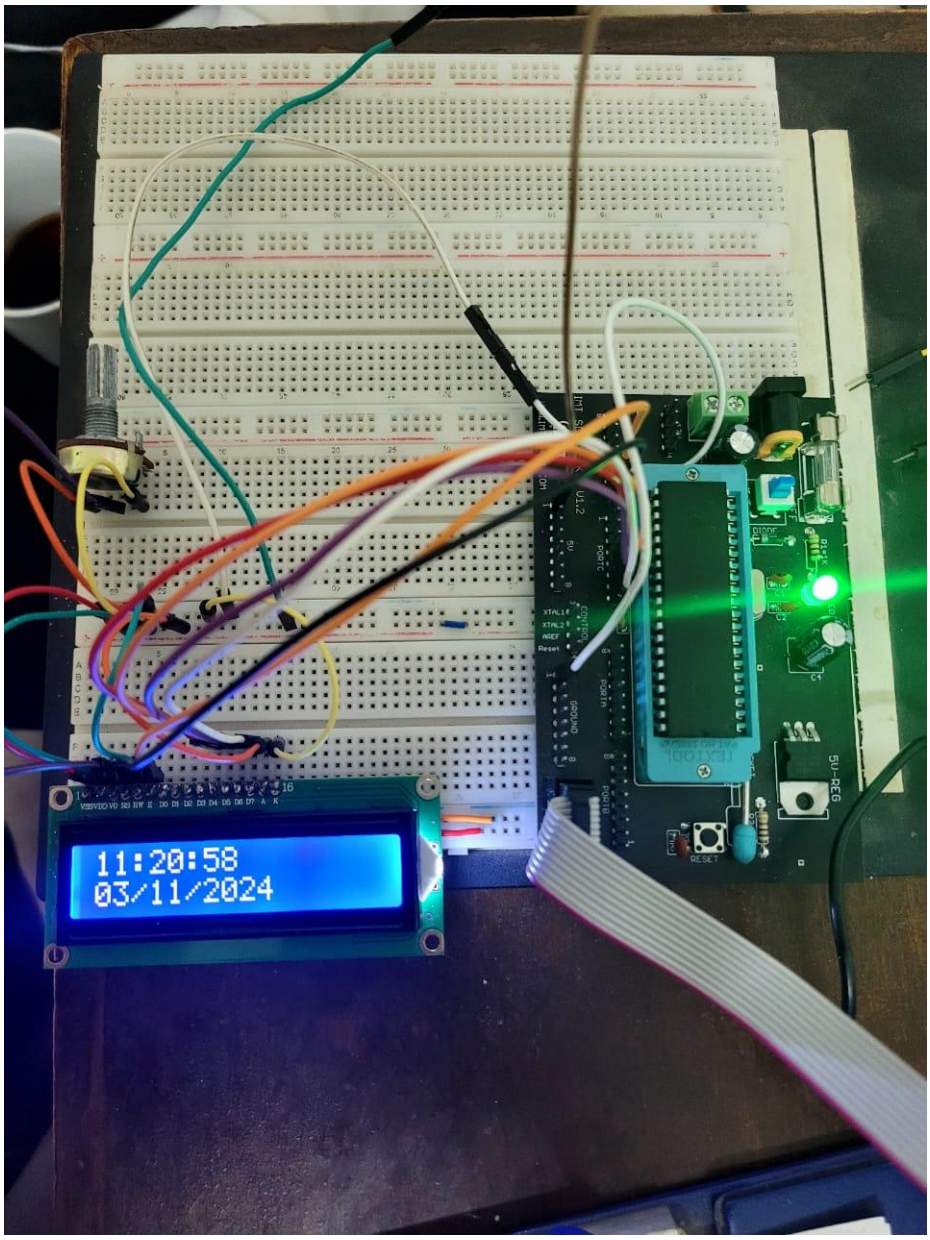

Figure 10 Hardware

VSS VDD V0 RS RW E D0 D1 D2 D3 D4 D5 D6 D7 A K
16
11:21:02
03/11/2024

Chapter 5

Code

The source code is structured to manage clock initialization, timekeeping and display logic. Code snippets illustrate key functions, highlighting their roles in the overall operation of the digital clock.

```
.equ F_CPU = 8000000                ;
Define the clock speed (8 MHz)
.equ LCD_CLEAR = 0x01               ; LCD
clear command
.equ LCD_4BIT_MODE = 0x28           ; LCD
4-bit mode command
.equ LCD_DISPLAY_ON = 0x0C          ; LCD
display on command
.equ LCD_SET_CURSOR = 0x80          ; LCD
set cursor command

.equ RS = 0       ; RS pin at PD0
.equ E = 1        ; E pin at PD1

.def temp = r16                     ;
Temporary register for data manipulation
.def hours = r17                    ;
Register for hours
.def minutes = r18                  ;
Register for minutes
.def seconds = r19                  ;
Register for seconds
.def day = r20                      ;
Register for day
.def month = r21                    ;
Register for month
.def year = r22                     ;
Register for year low byte
.def year_high = r23                ;
Register for year high byte

.org 0x0000                         ;
Program start
    rjmp main                       ; Jump
to main function

; ---- Main Program Entry and Setup ----
main:
    ; Initialize Ports
    ldi temp, 0xFF                  ; Set
all bits high on DDRD for control pins
    out DDRD, temp                  ; Set
PORTD as output

    ldi temp, 0xF0                  ; Set
high nibble as output for 4-bit LCD mode
    out DDRC, temp                  ; Set
PORTC as output

    ; Initialize Time and Date
    ldi hours, 11                    ;
Initial hours
    ldi minutes, 20                 ;
Initial minutes
    ldi seconds, 9                 ;
Initial seconds
    ldi day, 3                      ;
Initial day
    ldi month, 11                   ;
Initial month
    ldi year, low(2024)             ; Low
byte of year
    ldi year_high, high(2024)       ; High
byte of year

    ; Initialize LCD and Timer
    rcall lcd_init                  ;
Initialize LCD
    rcall timer1_init               ;
Initialize Timer

    sei                             ;
Enable global interrupts

; ---- Main Loop ----
main_loop:
    rcall lcd_display_time_and_date  ;
Display time and date on LCD
    rcall delay_1_second             ;
Delay approximately 1 second
    rjmp main_loop                   ;
Repeat main loop

; ---- Delay Functions ----
delay_1_second:
    ldi temp, 250                    ;
Adjust loop counts to approximate 1
second
delay_outer_loop:
    ldi temp2, 250                   ;
Inner loop counter
delay_inner_loop:
    dec temp2
```

```
    brne delay_inner_loop          ;
Inner loop
    dec temp
    brne delay_outer_loop          ;
Outer loop
    ret

delay_ms_2:                        ;
Delay for 2 milliseconds (adjusted as
needed)
    ldi temp, 50                   ;
Approximate delay, tune as needed
delay_ms_loop:
    dec temp
    brne delay_ms_loop
    ret

; ---- LCD Initialization ----
lcd_init:
    ldi temp, 0x02                 ;
Command for 4-bit initialization
    rcall lcd_command
    ldi temp, LCD_4BIT_MODE        ; 4-bit
mode command
    rcall lcd_command
    ldi temp, LCD_CLEAR            ; Clear
LCD
    rcall lcd_command
    ldi temp, LCD_DISPLAY_ON       ; Turn
on LCD display
    rcall lcd_command
    ldi temp, LCD_SET_CURSOR       ;
Cursor off
    rcall lcd_command
    ret

; ---- LCD Commands ----
lcd_command:
    ; Send high nibble
    out PORTC, temp                ;
Output command on PORTC
    cbi PORTD, RS                  ; Set
RS low (command mode)
    sbi PORTD, E                   ; Set E
high to latch data
    nop                            ; Small
delay
    cbi PORTD, E                   ; Set E
low

    ; Send low nibble
    swap temp                      ; Swap
nibbles
    out PORTC, temp                ;
Output command on PORTC
    sbi PORTD, E                   ; Set E
high
    nop                            ; Small
delay
    cbi PORTD, E                   ; Set E
low
    ret

lcd_data:
    ; High nibble
    out PORTC, temp                ;
Output data on PORTC
    sbi PORTD, RS                  ; Set
RS high (data mode)
    sbi PORTD, E                   ; Set E
high
    nop                            ; Small
delay
    cbi PORTD, E                   ; Set E
low

    ; Low nibble
    swap temp                      ; Swap
nibbles
    out PORTC, temp                ;
Output data on PORTC
    sbi PORTD, E                   ; Set E
high
    nop                            ; Small
delay
    cbi PORTD, E                   ; Set E
low
    ret

; ---- Display Time and Date ----
lcd_display_time_and_date:
    ; Clear LCD
    ldi temp, LCD_CLEAR
    rcall lcd_command
    rcall delay_ms_2               ; Small
delay for clearing

    ; Display HH:MM:SS
    rcall lcd_set_cursor_0         ; Set
cursor to beginning
    rcall display_time             ;
Display hours, minutes, seconds

    ; Display DD/MM/YYYY
    rcall lcd_set_cursor_1         ; Set
cursor to second line
    rcall display_date             ;
Display day, month, year
    ret

display_time:
    rcall lcd_data_hours           ;
Display hours
    ldi temp, ':'                  ;
Display colon
    rcall lcd_data
    rcall lcd_data_minutes         ;
Display minutes
    ldi temp, ':'                  ;
Display colon
    rcall lcd_data
    rcall lcd_data_seconds         ;
Display seconds
    ret

display_date:
```

```
    rcall lcd_data_day          ;
Display day
    ldi temp, '/'               ;
Display slash
    rcall lcd_data
    rcall lcd_data_month        ;
Display month
    ldi temp, '/'               ;
Display slash
    rcall lcd_data
    rcall lcd_data_year         ;
Display year
    ret

; ---- Timer Initialization ----
timer1_init:
    ; Set up Timer1 in CTC mode with a
1024 prescaler for 1-second intervals
    ldi temp, (1 << WGM12)
    out TCCR1B, temp
    ldi temp, (1 << CS12) | (1 << CS10)
    out TCCR1B, temp
    ret
```

Chapter 6

Conclusion & Future Enhancements

conclusion

The integration of an LCD display, and keypad interface into the digital clock results in a versatile timekeeping device with enhanced functionality. The project successfully meets its objectives, providing users with a dependable and feature-rich solution suitable for various applications.

Future Enhancements

Potential improvements include adding multiple alarms, customizable display options, or exploring wireless connectivity for advanced functionalities.

References

- Atmega32A-DataSheet-Complete-DS40002072A.pdf
- circuitdigest.com/microcontroller-projects/digital-alarm-clock-using-avr
- The AVR Microcontroller and Embedded Systems: Using Assembly and C Muhammad Ali Mazidi | Sarmad Naimi Sepehr Naim
- https://ram-e-shop.com/